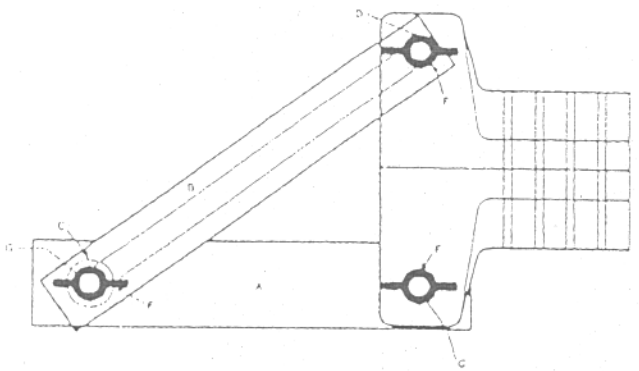

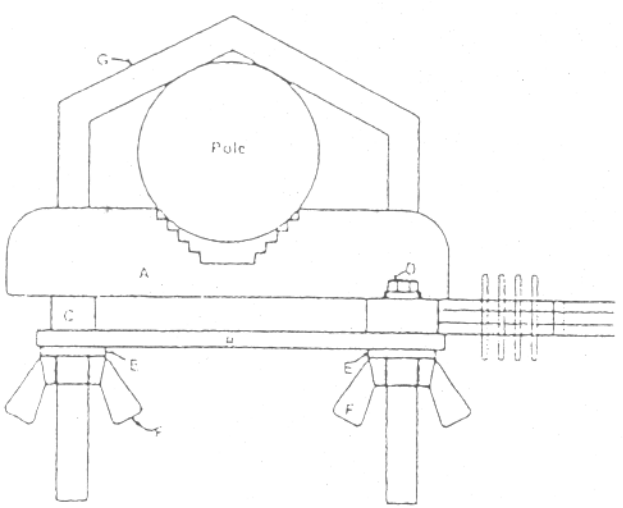

Symbol	Diagram	Name
B		Slider bracket (x1)
C	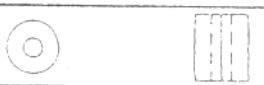	20mm Spacer (x1)
A	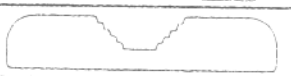	Econo Bracket (x1)
F		M6 WingNut (x3)
G	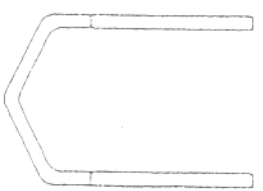	M6 U-Bolt (x1)
E	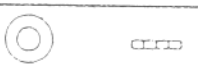	M6 Washer (x1)
D		M6 Bolt (x1)

Material	Treatment					
Notes:						
				VCL	05/03/2003	C1
			APP'D	CHKD	DRAWN	DATE	VER
A4	Not to Scale	Dimensions in mm	POINTING 33 Tabor Cres Wyndham 2330	Yagi Hinge Assembly		
				DRAWING NUMBER	SHEET NUMBER	