# CASE & CORD DIMENSION



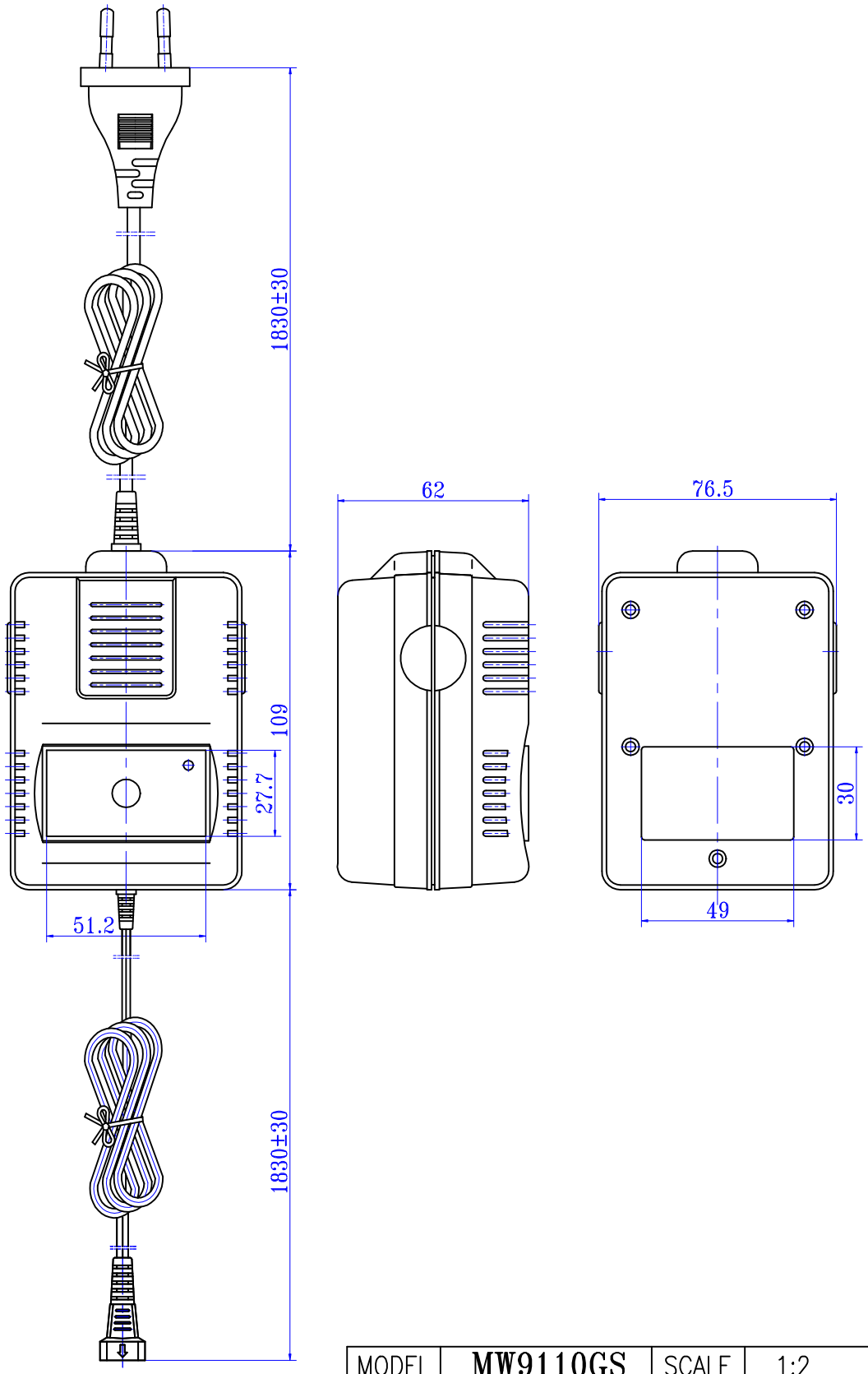


| | | | |
|---|---|---|---|
| MODEL | MW9110GS | SCALE | 1:2 |
| File | H/KXC/HK/9110GS6 | | |
| DESIGNED BY | 柯晓春 | DATE | |
| DRAWN BY | KE-XIAOCHUN | DATE | |
| CHEKED BY | 曾超 | DATE | |