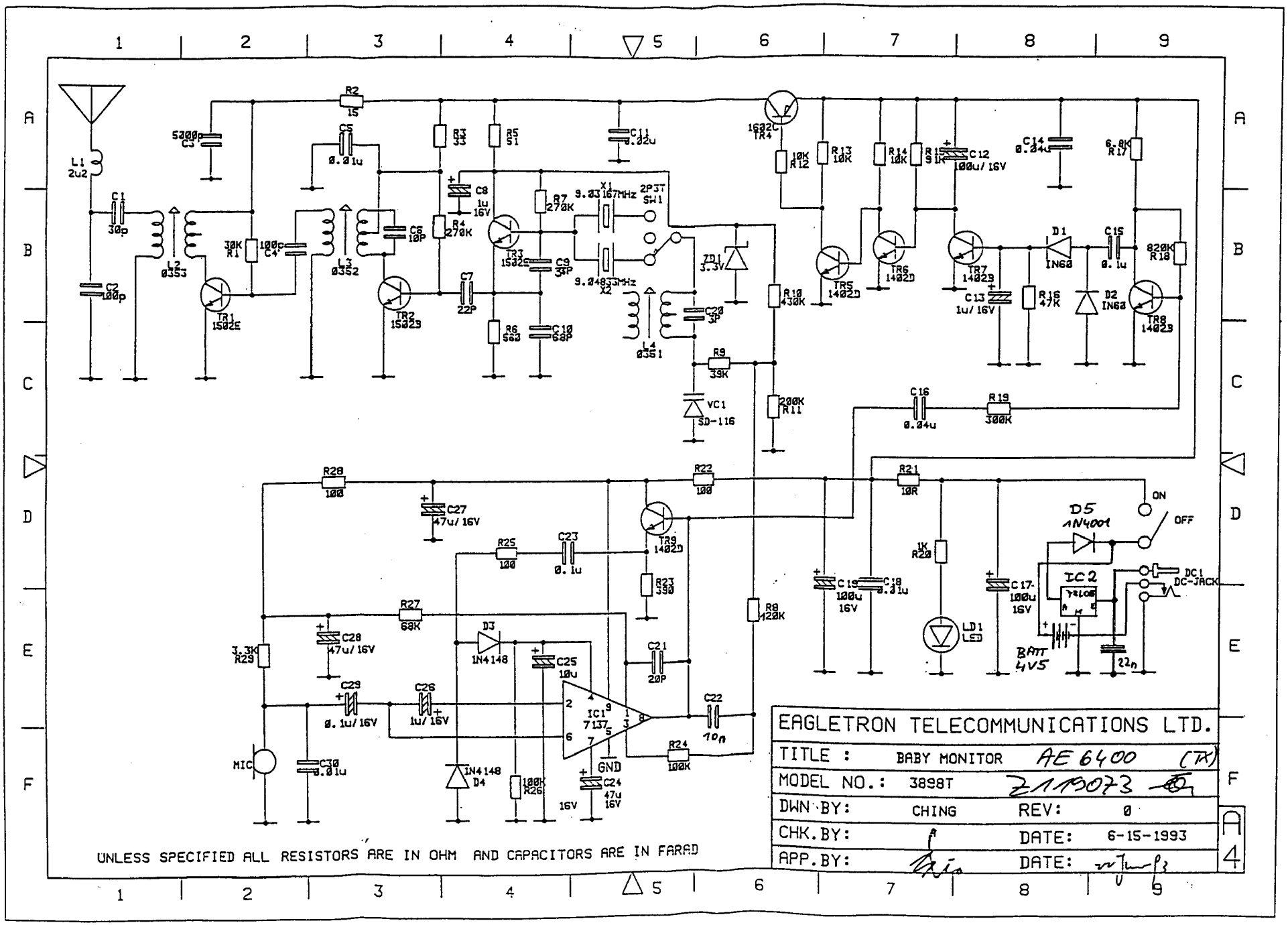
L1 2u2
C1 30p
C2 100p
L2 0353
TR1 1502E
30K R1
100p C4
5200p C3
L3 0352
R2 15
C5 0.01u
C6 10P
TR2 1502B
R3 33
R5 51
R4 270K
C8 1u 16V
C7 22P
R6 560
TR3 1502E
R7 270K
C9 33P
C10 68P
X1 9.03167MHz
X2 9.04833MHz
2P3T SW1
L4 0351
C20 3P
ZD1 3.3V
VC1 SD-116
C11 0.02u
R9 39K
R10 430K
R11 200K
1602C TR4
10K R12
R13 10K
R14 10K
R15 51K
C12 100u/16V
TR5 1402D
TR6 1402D
TR7 1402B
C13 1u/16V
R16 47K
D1 IN60
D2 IN60
C15 0.1u
C14 0.04u
6.8K R17
820K R18
TR8 1402B
C16 0.04u
R19 300K
R28 100
C27 47u/16V
R22 100
R21 10R
TR9 1402D
R25 100
C23 0.1u
R23 390
R27 68K
C28 47u/16V
D3 1N4148
C25 10u
C21 20P
R8 120K
3.3K R29
C29 0.1u/16V
C26 1u/16V
IC1 7137
C22 10n
R24 100K
MIC
C30 0.01u
IN4148 D4
100K R26
GND
C24 47u 16V
16V
C19 100u 16V
C18 0.01u
1K R20
LD1 LED
C17 100u 16V
D5 1N4001
ON
OFF
IC2 7805
DC1 DC-JACK
BATT 4V5
22n
EAGLETRON TELECOMMUNICATIONS LTD.
TITLE : BABY MONITOR AE 6400 (TX)
MODEL NO.: 3898T Z1B073
DWN BY: CHING REV: 0
CHK.BY: DATE: 6-15-1993
APP.BY: DATE:
A4
UNLESS SPECIFIED ALL RESISTORS ARE IN OHM AND CAPACITORS ARE IN FARAD